www.AVLELEC.com
ww.ENTRAPASS.com
www.TURNSTILES.us
8641 S. Warhawk Rd, Conifer, CO 80433
303-670-1099

UL 2416

Model No.

LWR-1219

Sectional wall-mount rack

12U x 19.05"D x 23.06"W

Construction & Features

- 16-gauge welded steel backbox and separate mounting section are shipped in two boxes so the backbox can be field-installed while the mounting section is loaded with equipment at the shop.
- Overall measurements: 27.125"H x 19.05"D x 23.06"W. Useable depth: 16", allowing partial extension of equipment into backbox.
- Load capacity 150 lbs.
- Backbox: 5.80"D with keyhole mounting slots on 16" centers, 10" x10" opening to mount over electrical pull boxes, 1/4-20 ground stud, embossed dimples on back plane for installation of board-mounted accessories, removable knockout panels on top/bottom, and 2 keyed side locks (keyed differently than optional front door)
- Front Mounting Section: 13.06"D with fully gusseted corners and triple formed (side-to-bottom/side-to-top) wrap design mounts to backbox from the inside with 2 heavy duty spring-loaded L-pins (self seating, positive locking). Pins can be moved to change swing orientation. Strength equivalent to 3/16" thick steel. Welded sides have vents and notches to accommodate optional single fan kit. Beveled front corners. Front vents (top and bottom of frame). Four knockouts for wireless antennas on rack top and bottom. One pair adjustable mounting rails, tapped 10-32 (recessed 0.625"). Integral top/bottom rails on E.I.A. spacing for mounting or lacing. **NOTE: Minimum clear-ance to allow the mounting section to swing open 90 degrees is 13.26 inches, plus an additional inch for the optional front door. The mounting section can ac-tually swing open greater than 90 degrees if addi-tional room is provided.** Roller closure keeps mounting section closed without mandatory locking.
- E.I.A. compliant, UL 2416 Listed
- Made in U.S.A. with 100% certified U.S. steel.
- PilotPoint™ screws (captive washers)

A&E Specifications

The E.I.A. compliant, UL2416 listed, welded sectional wall rack shall be AVLELEC Model No. LWR-1219, which shall consist of a backbox and mounting section made in the U.S.A. from 16 gauge certified U.S. steel. Overall measurements shall be 27.125"H x 19.05"D x 23.06"W (12U racking space). The mounting section shall be 13.06"D with triple formed side-to-bottom, side-to-top wrapped construction to achieve strength equivalent to 3/16" thick steel. It shall include side vents, one pair adjustable mounting rails tapped 10-32 (with mounting hardware), four knockouts for antennas (top and bottom), and integral rails on E.I.A. spacing (top and bottom). The mounting section shall attach to the backbox on the inside with two heavy duty, spring-loaded L-pins (self seating, positive lock-ing), which can be attached on either side to alter swing ori-entation. The backbox shall be 5.80"D with keyhole mounting slots on 16" centers, 10" x 10" rear opening, embossed dim-ples and lacing points on the back plane, knockout panels with combination knockouts (.75-.5", 15-1") on top and bottom, and two keyed side locks. The rack shall have a black wrinkle pow-der epoxy finish.

Technical Drawings

Measurements are inches.

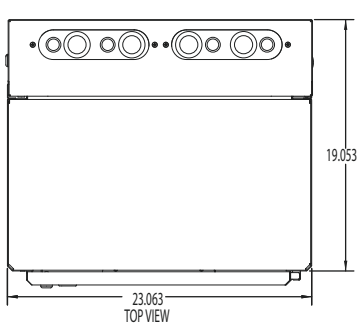

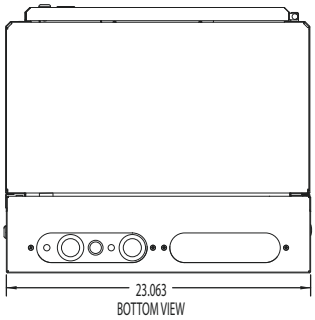

RACK TOP features 4 knockouts for wireless antennas (.5"), 2 knockout panels with combination knockouts (.75-.5", 1.5-1.")

RACK BOTTOM features 4 knockouts for wireless antennas (.5"), 1 blank panel, 1 panel with combination knockouts (.75-.5", 1.5-1.")

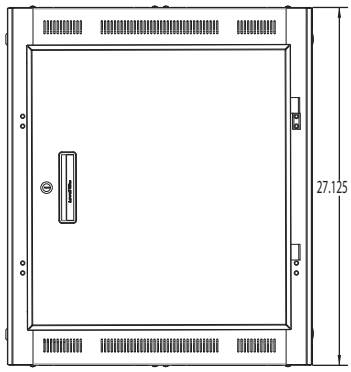

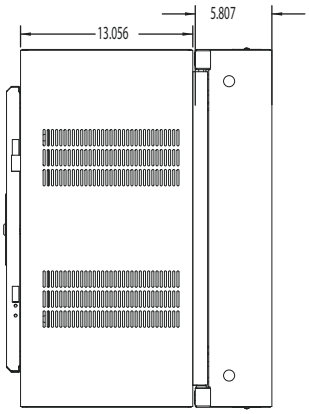

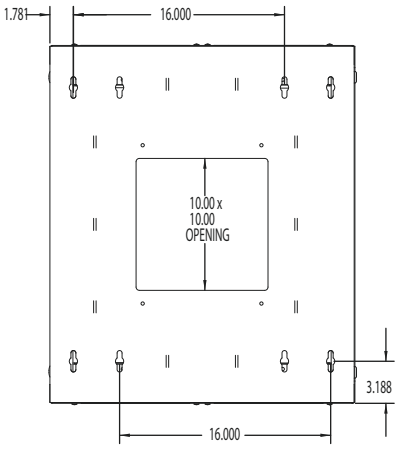

NOTE: Front door shown in drawings is optional.

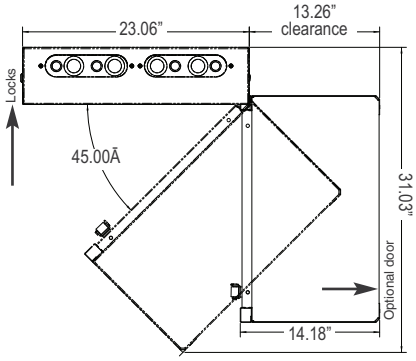

CORNER INSTALL DETAIL:
- Allow sufficient clearance for access to side locks (5")
- Allow additional 1" for optional door depth
- Minimum clearance for 90 degrees open is 13.26"

Options (order separately)

- Front Door (surface-mount): Solid steel, fully-vented steel, or smoked plexiglass mounts left or right. (LFD Series)
- Mounting Rails: sold in pairs (RRD-12)
- Single Fan Kit: Single whisper fan is ideal for spot cooling (FW1-KIT)

Model No. Summary

Model No.	*Description*	*Racking Space*	*Usable Depth*	*Overall Depth*	*Overall Height*	*Overall Width*
LWR-1219	Sectional wall rack	21" / 533mm / 12U	16" / 406mm	19.05" / 484mm	27.125" / 689mm	23.06" / 586mm
LFD-12	Solid steel front door					
LFD-12FV	Fully vented front door					
LFD-12P	Smoked plexiglass front door					
RRD-12	Mounting rails (12U, 1pr)					
FW1-KIT	Single fan kit					

One rack unit (RU or U) = 1.75" or 44.45mm