Model No.

LPTR4-1223

- **12U x 23.23"D x 19.13"W**
- **Load capacity 200 lbs.**

Pull out rack is designed to allow easier access to equipment stored in cabinetry. The removable base can be mounted flush or recessed up to 1.75" (to allow room for equipment protrusions). The rack secures to its base with front and rear screws.

Features

- Base with integral turntable has a push button release and four bottom rails to support the slide-out rack.
- Corner post rails are 11 gauge steel tapped 10-32
- Six cable lacing bars
- Front security panel (perforated) attaches with screws
- 1U vented panel
- Black powder epoxy finish
- Made in the U.S.A. with 100% certified U.S. steel
- EIA compliant
- Ships unassembled in two cartons
- Includes assembly and mounting hardware

A & E Specifications

The rack for built-in applications shall be AVLELEC Model No. LPTR4-1223 which shall be certified U.S. steel with a smooth black powder epoxy finish. Overall measurements shall be 23.58"H x 19.13"W x 23.23"D with 12U panel space. The base shall feature four bottom rails and integral turntable to allow the rack to slide forward, rotate and lock at 60 or 90 degrees. The rack shall include six cable lacing bars, 1U vented panel, perforated security panel and side supports with obround openings. Load capacity shall be 200 lbs. The rack shall ship unassembled in two cartons.

Installation Notes

- When installing, make sure to allow sufficient space at the sides for rotation. *Note that some recessed installations may not have sufficient room to rotate a full 90 degrees.*
- To ensure adequate cable length at the rack's maximum turn radius, rotate the rack fully before tying cables to rear lacing panels (see pg. 3).

To Service Equipment in an Installed Rack

1) Remove the security panel (attached with 2 screws).
2) Pull rack forward to clear the opening.
3) Push button on base front to release the turntable and rotate until it locks at 60 or 90 degrees (right or left) to work on equipment.

Optional (order separately)

- **LPTR-TC:** Steel top. Black finish.

- **LPTR-NS:** Zero space shelf for oversized (wide) equipment mounts to rack's side rails. 18.79"W x 16.38"D x 1.75"H. Bottom vents; side obrounds.

Model No. Summary

Model No.	*Description*	*Racking Space*	*Overall Depth*	*Useable Depth*	*Overall Height*	*Overall Width*
LPTR4-1223	Pull & Turn Rack	12U	23.23 in / 590 mm	23.00 in / 584 mm	23.58 in / 599 mm	19.13 in / 486 mm
LPTR-TC	Optional steel top					

Technical Drawings (Model No. LPTR4-1223)

Measurements are inches.

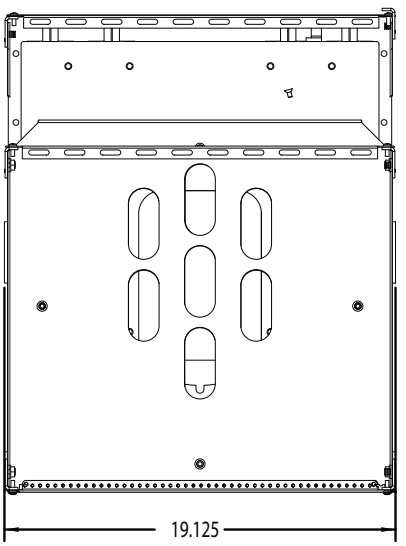

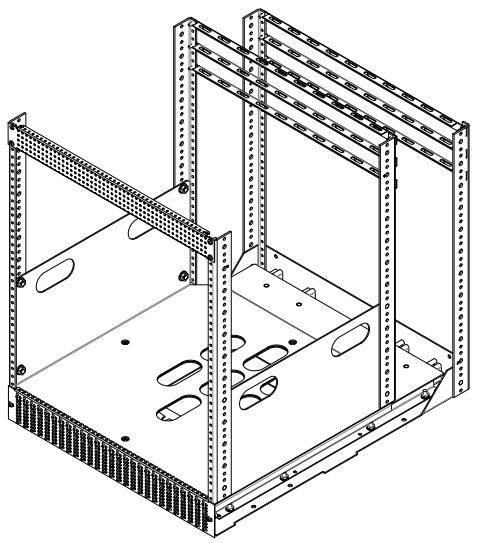

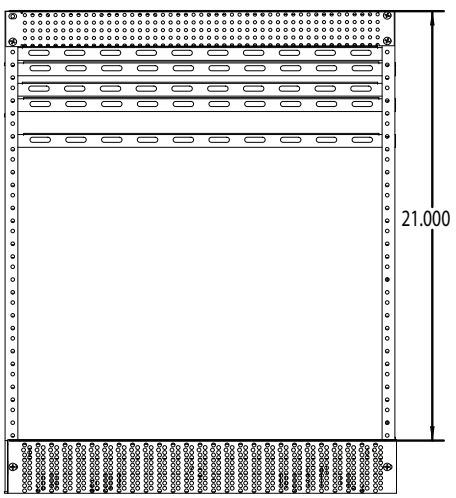

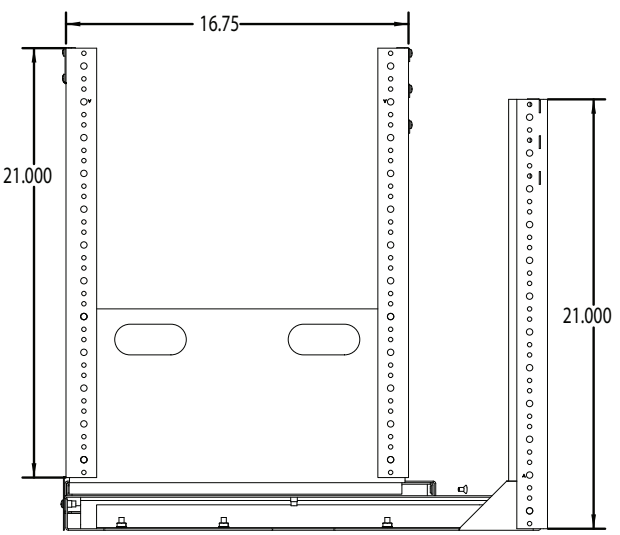

Installation Drawings (sample shown may differ from spec model)

Measurements are inches.

Base

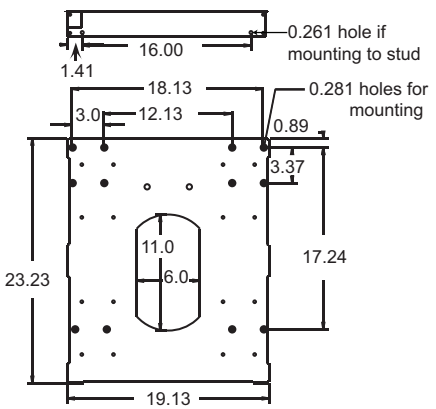

Dock Rack to Base

Secure with front and rear screws.

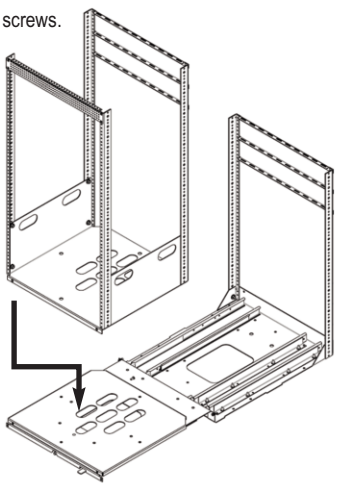

Rack Pulled Out From Base

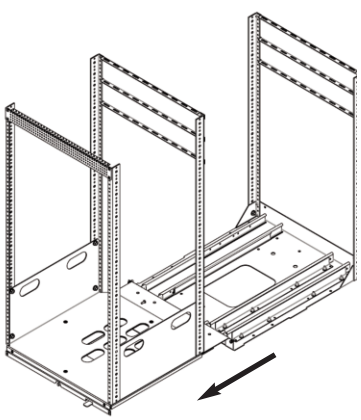

Rack Rotated 60 Degrees

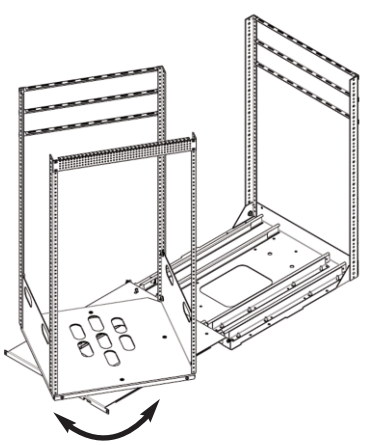

Rack Rotated 90 Degrees

NOTE: To ensure adequate slack, perform wire tie off when rack is fully rotated.

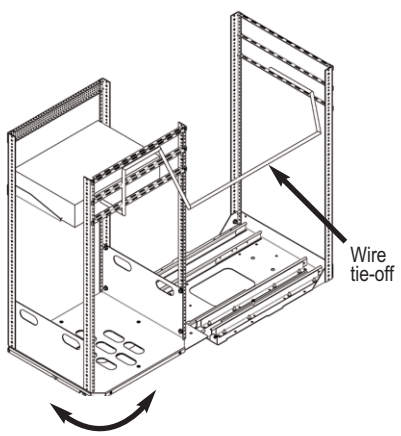

Attach Front Security Panel
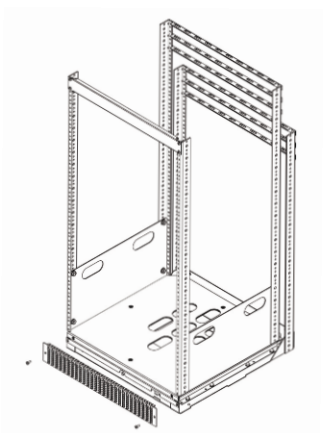
When equipment is mounted and wired, slide rack back into position and attach the front security panel with screws. (Note: use the screws to secure the rack even if the security panel is not used.)