www.AVLELEC.com
ww.ENTRAPASS.com
www.TURNSTILES.us
8641 S. Warhawk Rd, Conifer, CO 80433
303-670-1099



**Model No.**

# LDSR-1018

## Desktop rack with sloped front

- **10U x 18”D x 21.10”W**

The LDSR Series rack features a sloped front for easy viewing of mounted equipment from a seated position. It includes protective rubber feet.

### Construction & Features

- Welded 16 gauge steel with 12 degree sloped front
- Fixed position front mounting rails (tapped 10-32) are re-cessed 0.562” from frame
- Open back allows easy access to rear equipment controls
- Open front allows for protruding knobs or patch panel connec-tions. (This rack does not accept a front door.)
- Open base
- Black wrinkle powder epoxy finish
- Includes rubber feet (.5”H) to protect desktop
- Made in the USA with certified US steel
- Suitable for UPS shipping

### A&E Specifications

The rack for desktop use shall be AVLELEC Model No. LDSR-1018, which shall feature a 12 degree sloped front and measure 21.10”W x 18”D (at the base) x 19.35”H and provide 10 rack units of panel space. The welded assembly shall be 16-gauge steel with a black wrinkle powder epoxy finish. It shall include one pair fixed position front mounting rails tapped 10-32 and a set of pro-tective rubber feet which shall increase overall rack height 0.5”.

### Optional (order separately)

- LDTR-RAC10: Rear access cover for 10U rack cannot be used in conjunction with optional rear rails.
- RRTF-10: One pair mounting rails tapped 10-32, with hard-ware
- PRK: Protective runner kit for slide in applications (use instead of protective rubber feet)
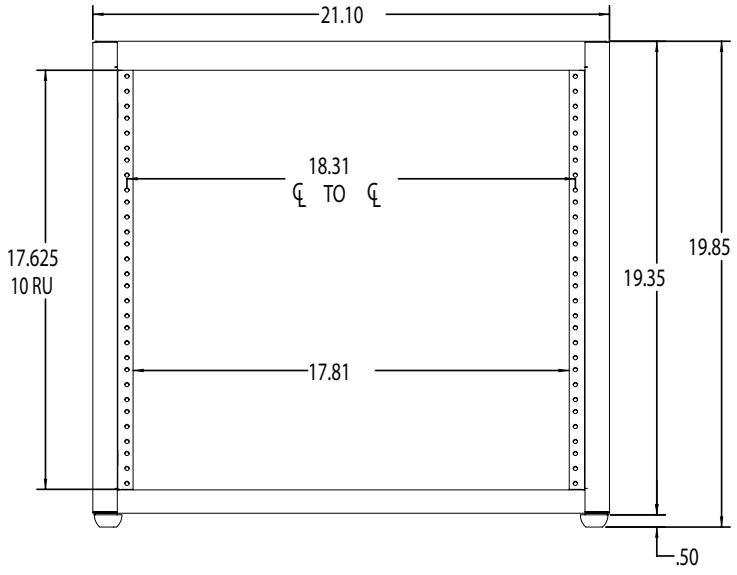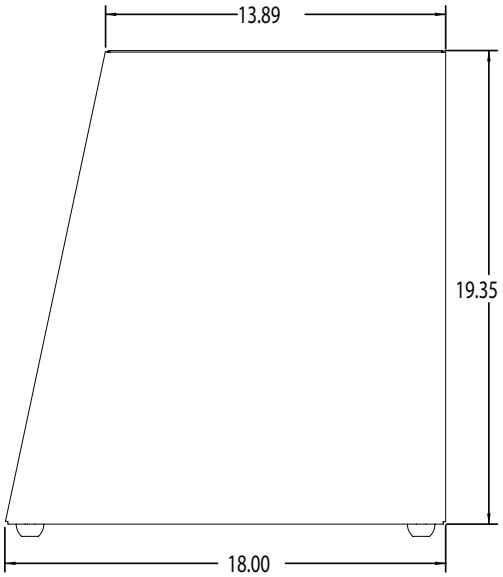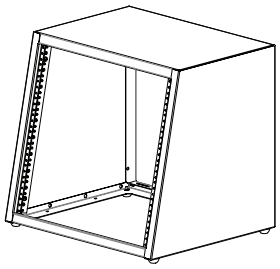
*All measurements are inches.*