Made in the USA

UL Listed only when used in conjunction with speaker-grille assembly No. ULD-SG8-2T572 or ULS-SG8-CT572 (UL1480 5th ed. fire protective signaling).

Model No.

CB84-SG

Surface-mount Backbox

• For 8" speaker

White steel backbox with 4" depth is ideal for ceiling or wall surface installation of a standard 8" speaker (or horn model LUH-15T) in schools, offices, medical facilities, restaurants, hotels and similar venues.

Features

- 11.5" square x 4” deep
- Precision-formed from 20-gauge steel, welded seams, white pow-der epoxy finish.
- Front formed flanges with U-clips to add a screw-mount grille.
- Universal mounting pattern in rear for installation to 4" square, 4" octagon, 2-gang or 1-gang E.O. box (not included).
- 0.375" hole with grommet for wire access in rear
- Two sides have knockouts for 500 Series wire mold
- 1.5” thick acoustic batting
- Made in the U.S.A. with certified U.S. steel

Universal hole pattern plus center hole for wiring punched on rear.

A&E Specifications

The surface-mount backbox shall be AVLELEC Model CB84-SG, which shall be fabricated of 20-gauge steel and lined with 1.5" acoustic batting. The rear shall include provisions to mount a 4" square, 4" octagon, 2-gang or 1-gang E.O. box (not included). The rear shall also have a 0.375" diameter hole with grommet for wire access. Two sides shall have knockouts for 500 Series wire mold. The backbox shall measure 11.5" square x 4" deep and have a white powder epoxy finish. It shall feature four holes and 8-32 U-clips at flanged corners to accept a screw-mount grille (order separately).

Compatible Components (order separately)

- AVLELEC Grille Model: SG8, IC-105A
- Channel Rail Model: SS24, SS30
- Speaker/Grille Assembly Models: ULD-SG8-2T572 or ULS-SG8-CT572

Model Number

Model No.	*Description*	*Dimensions*	*Volume (cu.ft.)*	*Lining*	*Finish*	*UL Listed*
CB84-SG	Surface-mount steel backbox	11.5” square x 4” deep	0.306	1.5" acoustic batting	white	Yes*

** Backbox is only UL Listed when used in conjunction with AVLELEC speaker/grille assembly No. ULD-SG8-2T572 or ULS-SG8-CT572 (UL1480 5th ed. fire protective signaling).*

Technical Drawings

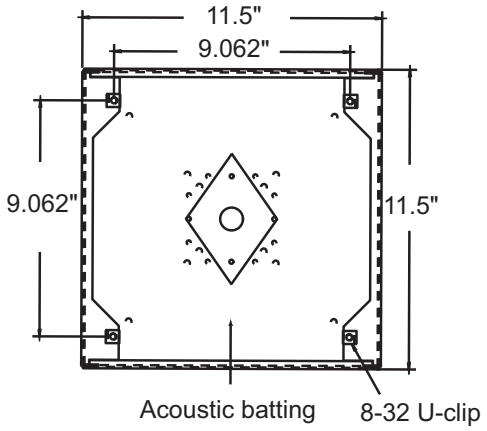

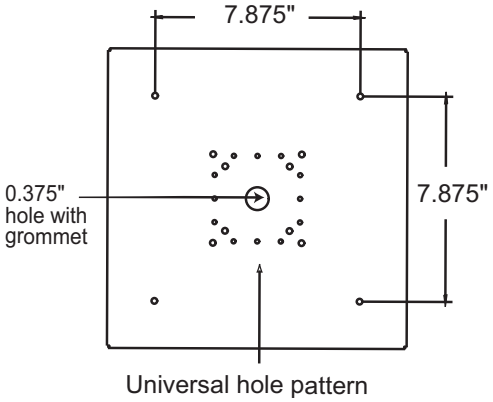

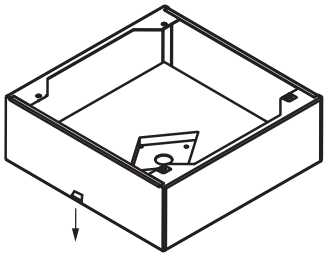

500 Series wire mold
access on 2-sides